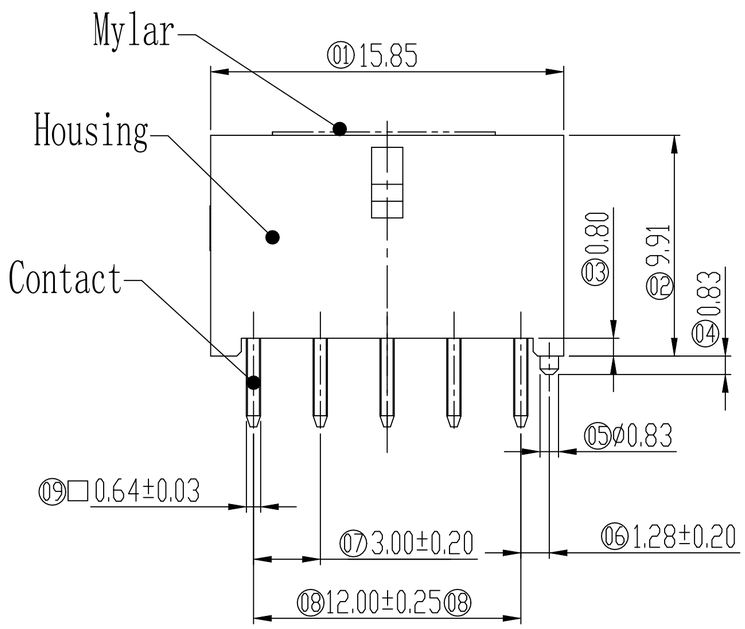

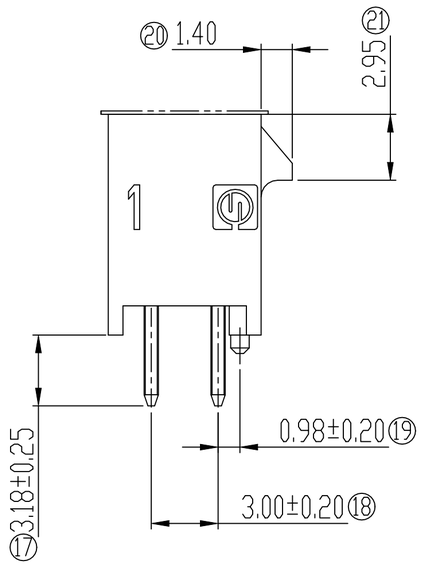

Performance characteristics:

1. Main body part material
   Insulator: LCP black UL94V-0
   Contact terminal: red copper, 1.27μm Min. Ni under plated,
   outer plating Sn 3μm Min
2. Electrical requirements:
   Current rating: 9.5 A
   Voltage rating: 600 V
   Contact resistance: ≤10 mΩ
   Insulation resistance: ≥1000 MΩ
   Withstanding voltage: 1000 Vr.m.s, 1mA, 60s
3. Mechanical requirements
   Retention force: ≥10 N/pin
4. Environment specification
   Working temperature: -40℃～+105℃
   Humidity: ≤93% at 40℃
   Resistance to soldering heat: 260℃, 30s
5. Packing & storing
   Method of packing: tape&reel, outer box
   Storing condition: temperature of -10℃～+40℃
   below 80% relative humidity
6. Style of installation: solder pcb installation(PIP or THT)
7. To prevent the pollution of the environment product info
RoHS agreement: In line with the European Union RoHS.

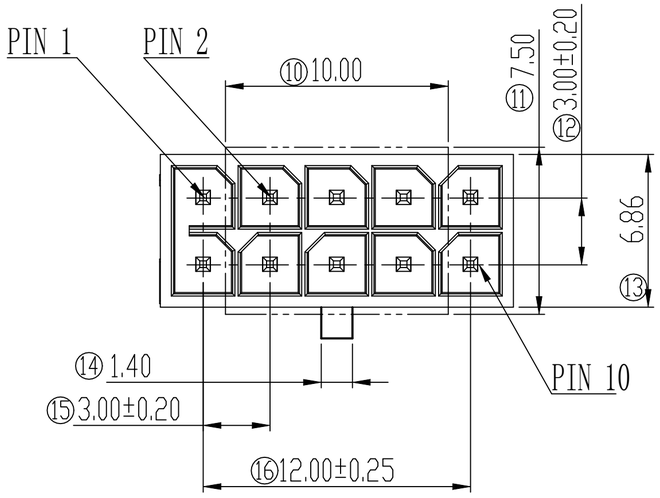

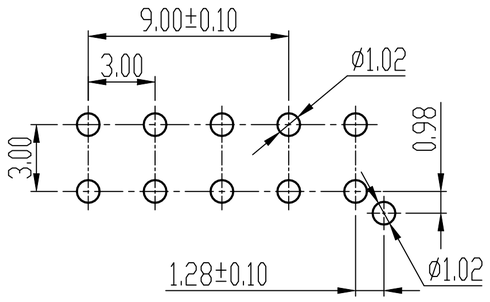

Recommend P.C.B Layout(±0.05)
(Recommend P.C.B Thickness: 1.60)

Unless otherwise specified tolerance:

X.	±0.50	X.°	±3°
.X	±0.38	.X°	±2°
.XX	±0.25		

Mark	NO.	File NO.	Signature	Date
DRAW		zengxiaocheng 2026.05.15		
CHK				
MAN				
STD				
APP				

3.00mm Pitch Wafer
Dual Row Straight Type
With Pegs 2x05Pin

1349-109-MB-3

SL0.1349.103

Projection	Rev.	Weight	Scale
	A0		

All Dimensions in mm | Sheet 1 of 1

SHINNING SHENZHEN SHINNING ELECTRONIC CO.,LTD.