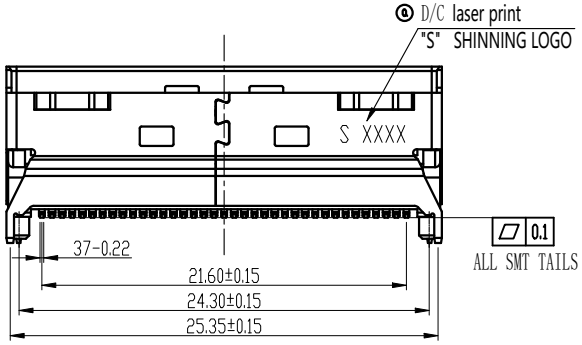

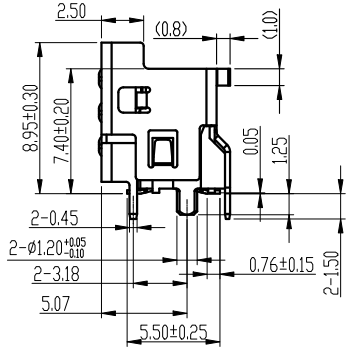

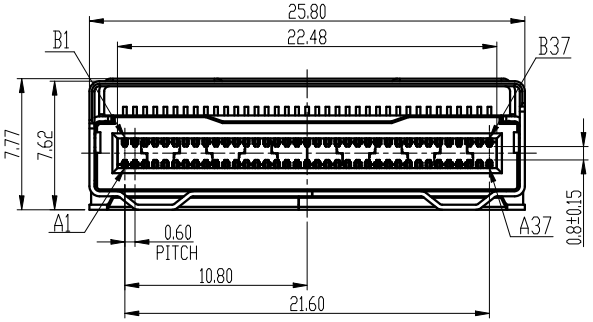

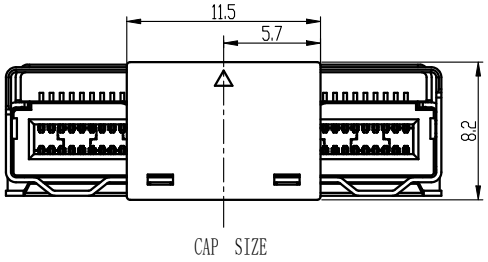

Performance characteristics:

1. Main body part material
   Insulator: high temperature thermoplastic,Black,UL94V-0
   Terminal: copper alloy,1.27μm Min. Ni under plated,
   contact area plating Au 0.76μm, Tail plating Sn.
2. Electrical requirements:
   Contact resistance: ≤30 mΩ
   Insulation resistance: ≥1000 MΩ
   Withstanding voltage: 300V DC, 0.5mA, 60s
3. Mechanical requirements
   Durability: 200 times
4. Environment specification
   Working temperature: -40℃～+85℃
6. Packing & storing
   Method of packing: Tape&Reel, Carton
   Storing condition: temperature of -40℃～+85℃
   below 80% relative humidity
7. Style of installation: SMT
8. To prevent the pollution of the environment product info
RoHS agreement:In line with the european union RoHS.

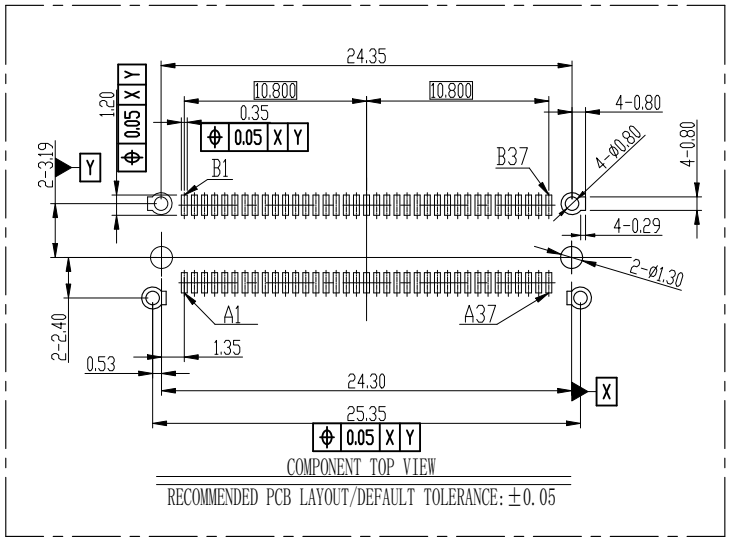

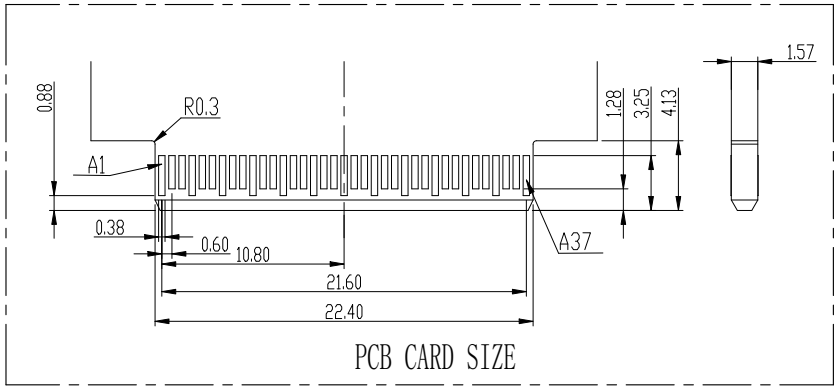

Unless otherwise specified tolerance:

X.	±0.50	X.°	±3°
.X	±0.38	.X°	±2°
.XX	±0.25		

ⓐ	1	202606240204	JAKEY	2026.06.25
Mark	NO.	File NO.	Signature	Date
DRAW		JAKEY 2026.05.12		
CHK				
MAN				
STD				
APP				

MCIO 8X 0.6PITCH 74PIN
VERTICAL SMT
Anti-reverse insertion

1893-212-18-3

SL0.1893.001

Projection	Rev.	Weight	Scale
	A1		

All Dimensions in mm | Sheet 1 of 1

SHINNING SHENZHEN SHINNING ELECTRONIC CO.,LTD.