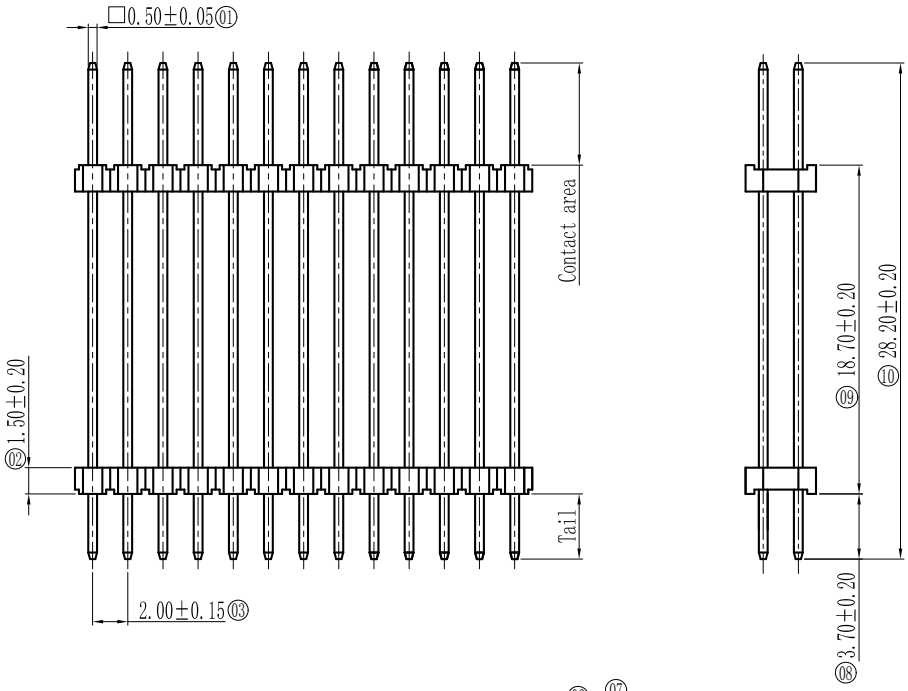

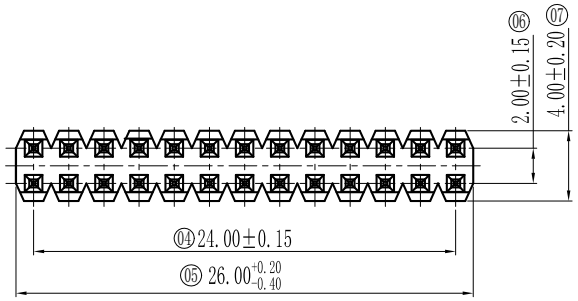

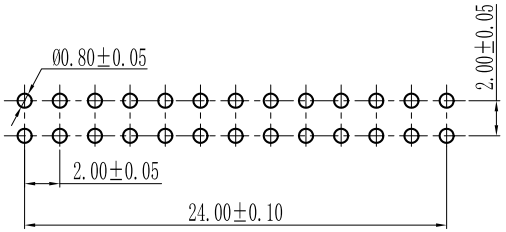

PCB LAYOUT

Performance characteristics:

1. Main body part material
   Insulator:LCP BLACK UL94V-0
   Contact terminal: brass,1.27μm Ni under plated,contact plating Au0.76um,tail plating Sn.
2. Electrical requirements:
   Current rating: 2 A
   Contact resistance: ≤20 mΩ
   Insulation resistance: ≥1000 MΩ
   Withstanding voltage: 500 Vr.m.s, 1ma, 60s
3. Mechanical requirements
   Retention: ≥4.5 N/pin(before solder)
4. Environment specification
   Working temperature: -55℃～+125℃
   Humidity: ≤93% at 40℃
   Resistance to soldering heat: 265℃±5℃, 10s
5. Packing & storing
   Method of packing: plastic bag,outer box
   Storing condition: temperature of -10℃～+40℃ below 80% relative humidity
6. Style of installation: solder pcb installation(THT)
7. To prevent the pollution of the environment product info
   RoHS agreement:In line with the European Union RoHS

Unless otherwise specified tolerance:

X.	±0.50	X.°	±3°
.X	±0.38	.X°	±2°
.XX	±0.25		

Mark	NO.	File NO.	Signature	Date
DRAW		XiaoWei Pan 2021.05.11		
CHK		Tim 2021.05.21		
MAN				
STD		Juanli lai 2021.05.21		
APP		Alan 2021.05.21		

2.00mm pitch double row board spacers straight pin Housing reverse 2x13PIN

1226-26B-A8-3

SL0.1226.005

Projection	Rev.	Weight	Scale
	A0		

All Dimensions in mm | Sheet 1 of 1

SHINNING SHENZHEN SHINNING ELECTRONIC CO.,LTD.