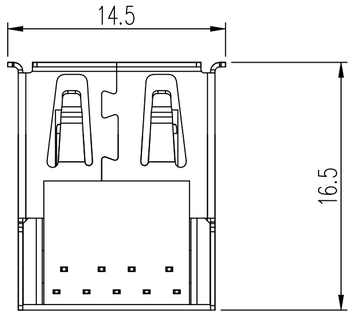

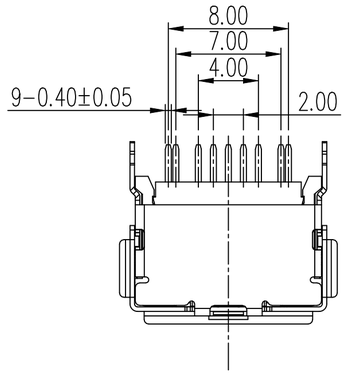

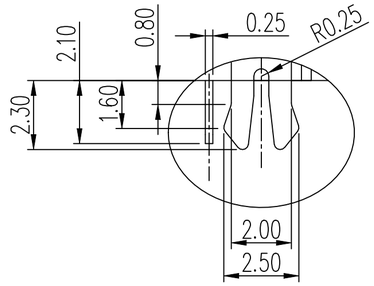

DETAIL A (2：1)

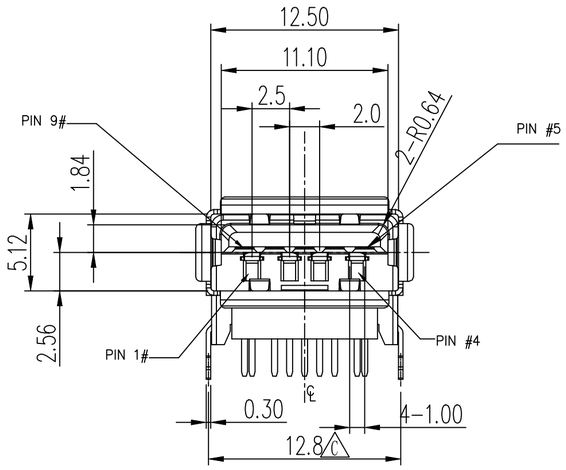

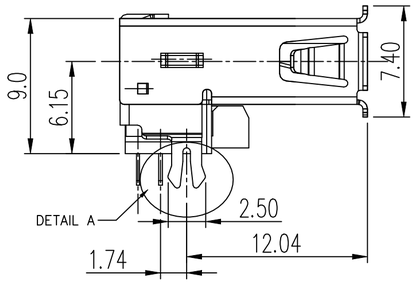

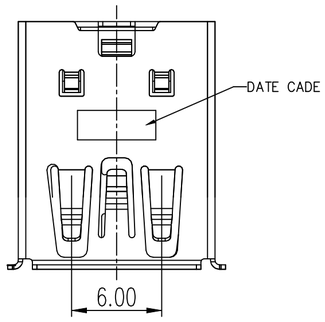

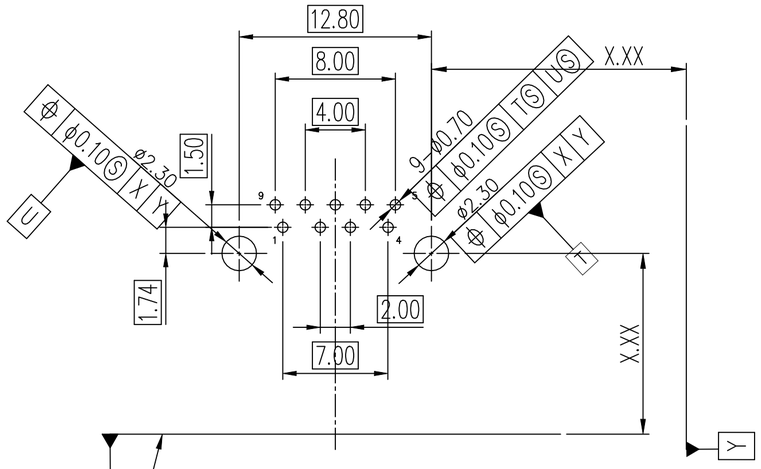

RECOMMENDED P.C.B LAYOUT
TOP VIEW (TOLRANCE: ±0.05)

Performance Characteristics:

1. Main Body Part Material
   Insulator: PA9T Blue UL94V-0
   Contact Terminal 1-4: Phosphor Bronze, 0.762um Gold Plated on Contact Area, 2.54um Min. Matte-Tin Plated on Solder, 1.27um Min Nickel Under Plated.
   Contact Terminal 5-9: Brass, 0.762um Gold Plated on Contact Area, 2.54um Min. Matte-Tin Plated on Solder, 1.27um Min Nickel Under Plated.
   Shell: Steel, 1.27um Min. Nickel Plated.
   Back Shell: Stainless Steel, 1.27um Min. Nickel Plated.
2. Electrical Requirements
   Current Rating: 1.8 A(Pin 1,4,7),
   0.25 A(Other Pin)
   Voltage Rating: 100 VAC RMS
   Contact Resistance: ≤30 mΩ(Pin 1,4,7),
   ≤50 mΩ(Other Pin),
   Insulation Resistance: ≥100 mΩ
   Withstanding Voltage: 100 Vr.m.s, 1ma, 60s
3. Mechanical Requirements
   Insertion Force: ≤35 N
   Extraction Force: ≥10 N
4. Environment Specification
   Working Temperature: -55℃～+85℃
   Humidity: ≤93% At 40℃
   Resistance To Soldering Heat: 265℃±5℃, 5s (THT)
5. Packing & Storing
   Method Of Packing: Tray, Carton/ or Reel, Carton
   Storing Condition: Temperature Of -10℃～+40℃
   Below 80% Relative Humidity
6. Style Of Installation: Solder PCB (THT) Installation
7. To Prevent The Pollution Of The Environment Product Info rohs agreement: exempt (compliance with the exempt discipline of european union)

Unless otherwise specified tolerance:

X.	±0.50	X.°	±3°
.X	±0.40	.X°	±2°
.XX	±0.30		

Mark	NO.	File NO.	Signature	Date
DRAW		Tang Jianping 2020.12.22		
CHK				
MAN				
STD				
APP				

USB 3.0, A TYPE, RIGHT ANGLE

1624-324-18-6

SL0.1624.006

Projection	Rev.	Weight	Scale
	A0		

All Dimensions in mm | Sheet 1 of 4

SHINNING SHENZHEN SHINNING ELECTRONIC CO.,LTD.