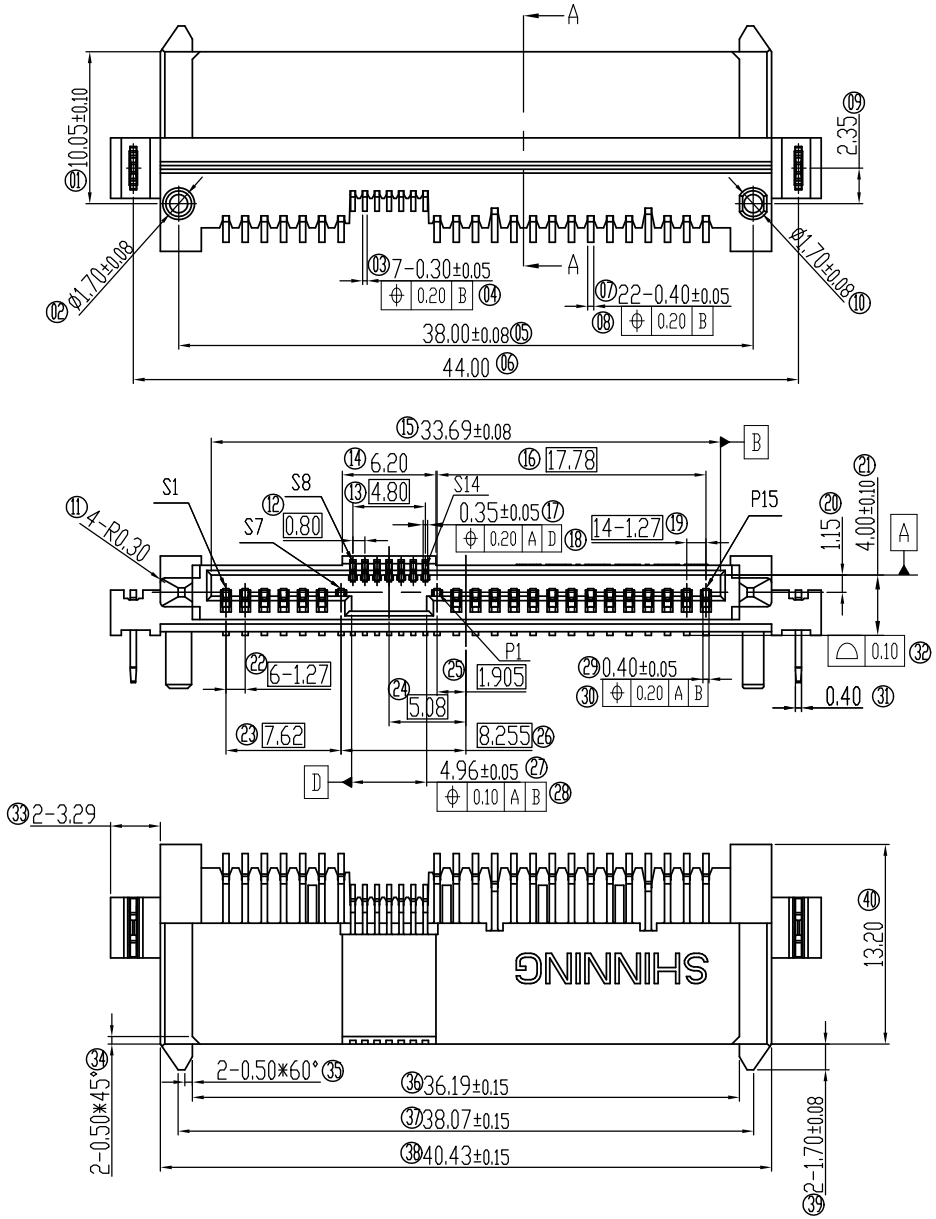

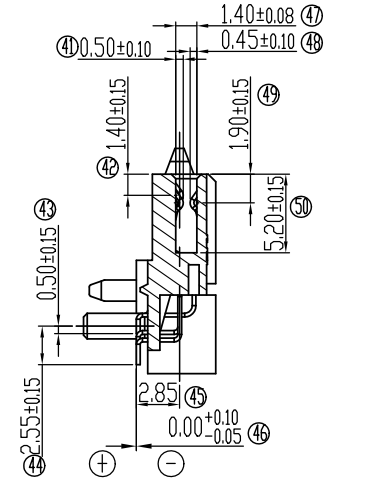

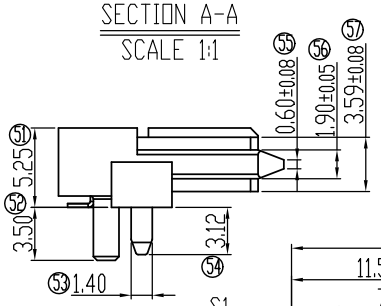

Performance characteristics:

1. Main body part material
   Insulator: PA9T black UL94V-0
   Contact terminal: Copper alloy, 1.27μm Ni under plated, contact area plating Au 0.76μm, Tail plating Sn.
2. Electrical requirements:
   Current rating:
   Power Pin: 1.5A
   Signal Pin: 0.5A
   Contact resistance: ≤45 mΩ
   Insulation resistance: ≥1000 MΩ
   Withstanding voltage: 500 Vr.m.s, 1mA, 60s
3. Mechanical requirements
   Insertion force: ≤25N
   Extraction force: ≥5N
   Mechanical life: 500 cycles
4. Environment specification
   Working temperature: -40℃～+85℃
5. Applicable standard: SFF-8482
6. Packing & storing
   Method of packing: reel, outer box
   Storing condition: temperature of -10℃～+40℃ below 80% relative humidity
7. Style of installation: SMT pcb Installation
8. To prevent the pollution of the environment product info RoHS agreement: In line with the european union RoHS.

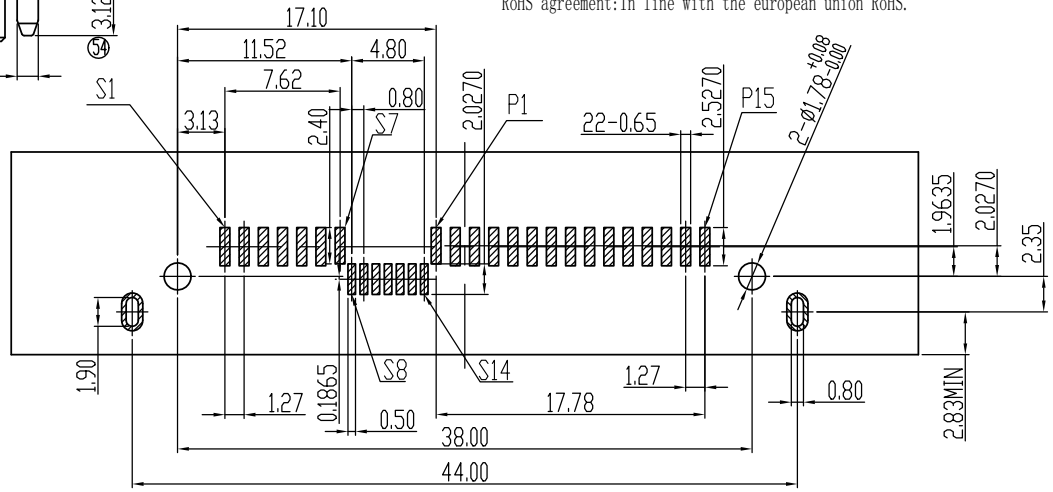

RECOMMENDED PCB LAYOUT

Unless otherwise specified tolerance:

X.	±0.50	X.°	±3°
.X	±0.38	.X°	±2°
.XX	±0.25		

Mark	NO.	File NO.	Signature	Date
DRAW		Frank 2019.11.28		
CHK		Lawrence 2020.03.12		
MAN				
STD		Juanli lai 2020.03.13		
APP		Alan 2020.03.13		

SAS 29PIN FEMALE
Right Angle TYPE

1882-292-08-3

SL0.1882.003

Projection	Rev.	Weight	Scale
	A0		

All Dimensions in mm | Sheet 1 of 1

SHINNING SHENZHEN SHINNING ELECTRONIC CO.,LTD.