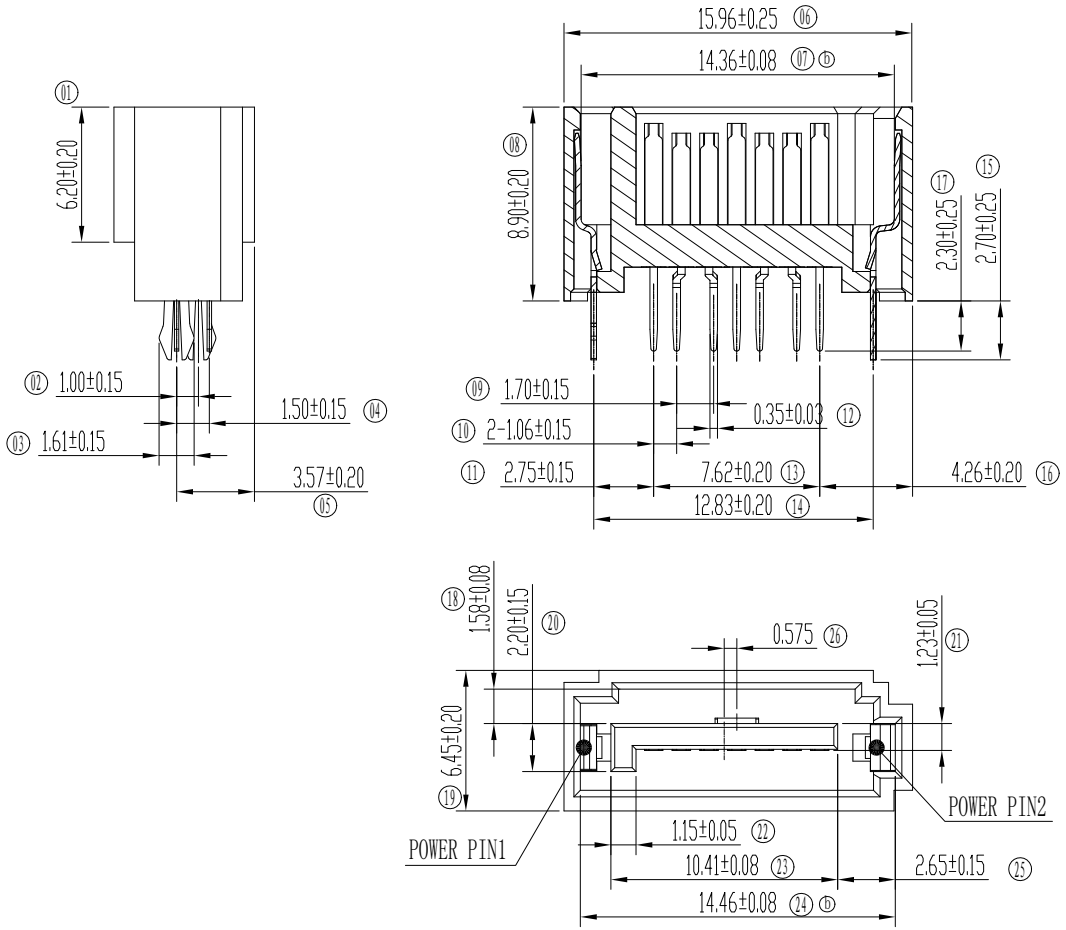

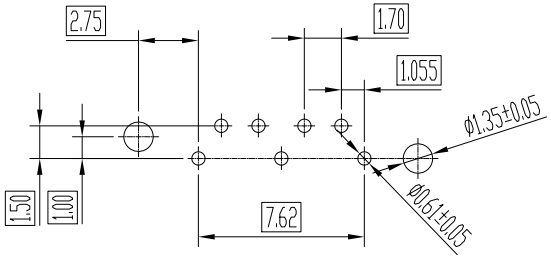

RECOMMEND PCB LAYOUT thickness:1.60mm

PCB TOLERANCE: ±0.05

Performance characteristics:

1. Main body part material
   Insulator: LCP Black UL94V-0
   Contact terminal: Brass, 1.27μm Ni under plated, outer plating contacts area Au 0.76μm, tail Sn3～5μm。
   Power Pin: Brass, 1.27μm Ni under plated, outer plating contacts area gold flash, tail Sn3～5μm。
2. Electrical requirements:
   Current rating: 1.5 A
   Contact resistance: ≤30 mΩ
   Insulation resistance: ≥1000 MΩ
   Withstanding voltage: 500 Vr.m.s, 1mA, 60s
3. Mechanical requirements
   ⓐ Terminal Retention force: ≥5N/pin
   Mechanical life: 100 cycles
4. Environment specification
   Working temperature: -35℃～+85℃
5. Packing & storing
   ⓒ Method of packing: Tube, outer box
   Storing condition: temperature of -10℃～+40℃ below 80% relative humidity
6. Style of installation: Solder PCB installation
7. To prevent the pollution of the environment product info: In line with the european union RoHS

Unless otherwise specified tolerance:

X.	±0.50	X.°	±3°
.X	±0.38	.X°	±2°
.XX	±0.25		

Mark	NO.	File NO.	Signature	Date
ⓒ	1	397542	ZhaoLin	2019.05.24
ⓑ	2	279932	ZhaoLin	2018.01.24
ⓐ	1	236588	ZhaoLin	2017.08.03

DRAW	LinZhao 2017.01.17
CHK	Tim 2020.12.02
MAN	
STD	Junali lai 2020.12.03
APP	Alan 2020.12.03

SATA 7 Pin + 2 Power pin Male Connector

1877-07C-58-3

SL0.1877.003

Projection	Rev.	Weight	Scale
	A3		

All Dimensions in mm | Sheet 1 of 1

SHINNING SHENZHEN SHINNING ELECTRONIC CO.,LTD.