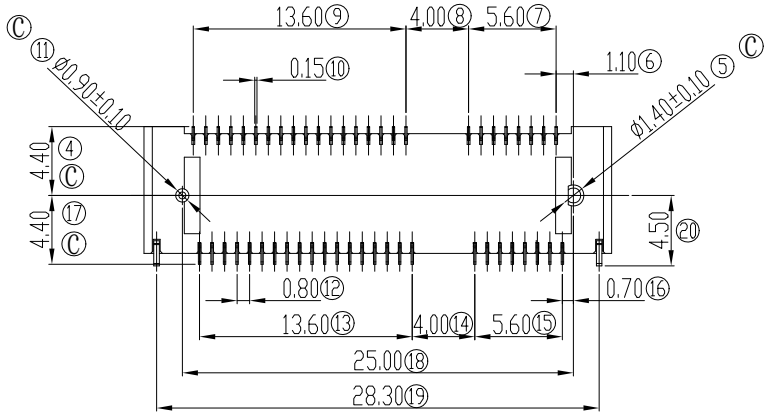

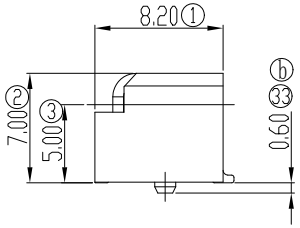

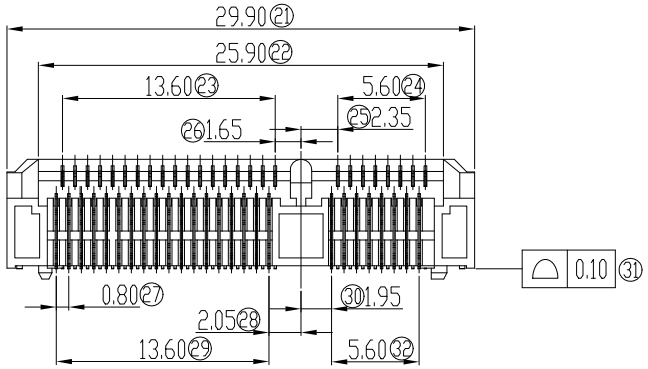

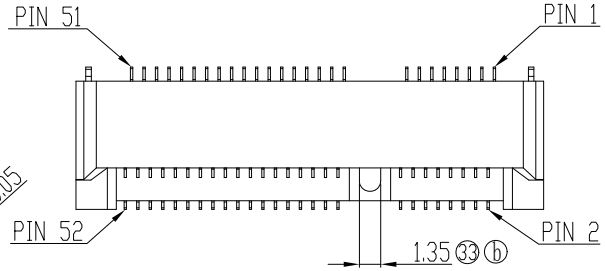

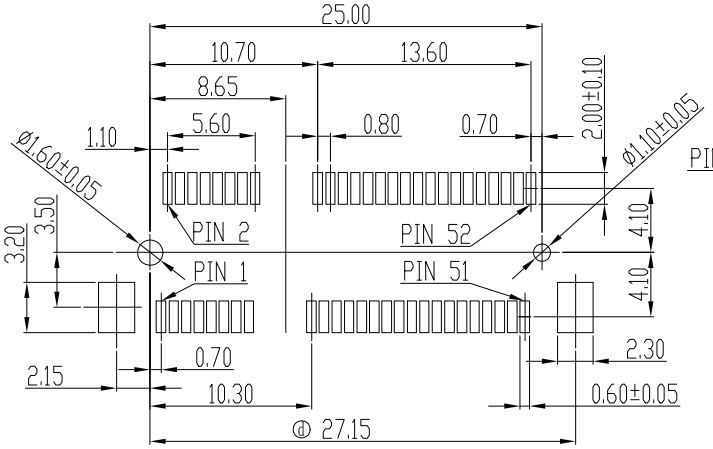

Recommended P.C.B Layout

Performance characteristics:

1. Main body part material
   Insulator: LCP,Black,UL94V-0
   Contact terminal: copper alloy,1.27μm Min. Ni under plated, outer plating gold flash
   ⓑFitting nail:copper alloy,1.27μm Min. Ni under plated, outer plating tin 2.54μm Min.
2. Electrical requirements:
   Current rating: 0.5 A
   Voltage rating: 50 V
   Contact resistance: ≤55 mΩ
   Insulation resistance: ≥500 MΩ
   Withstanding voltage: 300 Vr.m.s, 1mA, 60s
3. Mechanical requirements
   Mechanical life: 50 cycles
   Wire gauge:
4. Environment specification
   ⓒWorking temperature: -40℃～+100℃
   Humidity: ≤93% at 40℃
   Resistance to soldering heat: 260℃±5℃, 10s
6. Packing & storing
   Method of packing: tray, outer box
   Storing condition: temperature of -10℃～+40℃ below 80% relative humidity
7. Style of installation: SMT
8. To prevent the pollution of the environment product info
RoHS agreement:In line with the european union RoHS.

Unless otherwise specified tolerance:

X.	±0.50	X.°	±3°
.X	±0.38	.X°	±2°
.XX	±0.25		

Mark	NO.	File NO.	Signature	Date
ⓓ	1	284285	ZhaoLin	2018.02.08
ⓒ	5	134614	Lawrence	2016.08.06
ⓑ	4	93472	Change Yu	2016.02.23

DRAW	Change Yu 2015.11.16
CHK	Tim2018.2.27
MAN	Spring2018.3.1
STD	Alan2018.3.1
APP	

0.80mm Pitch Mini PCI Express H=7.0mm 52PIN Connector

1887-520-71-3

SL0.1887.001

Projection	Rev.	Weight	Scale
	A4		

All Dimensions in mm | Sheet 1 of 1

SHINNING SHENZHEN SHINNING ELECTRONIC CO.,LTD.